# F3

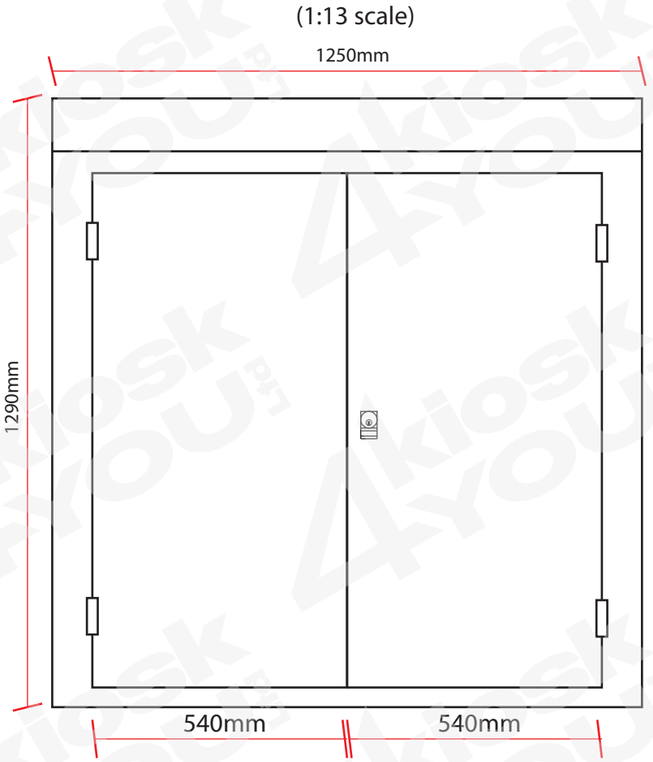


Front View

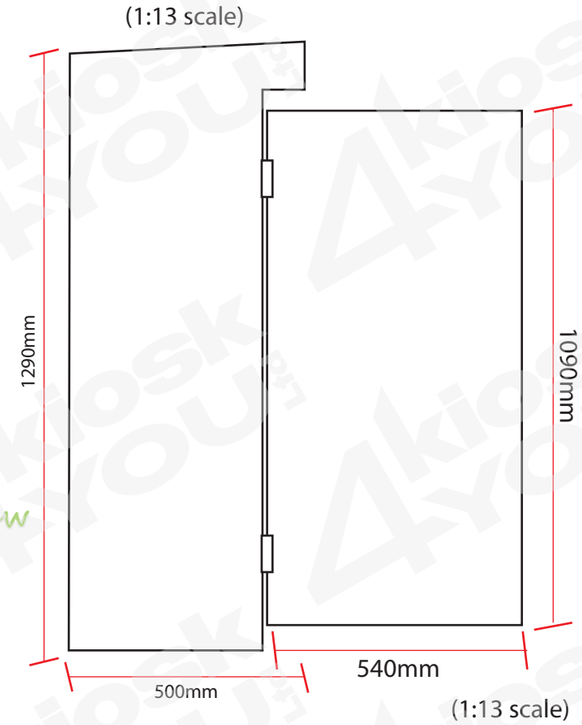


Side View

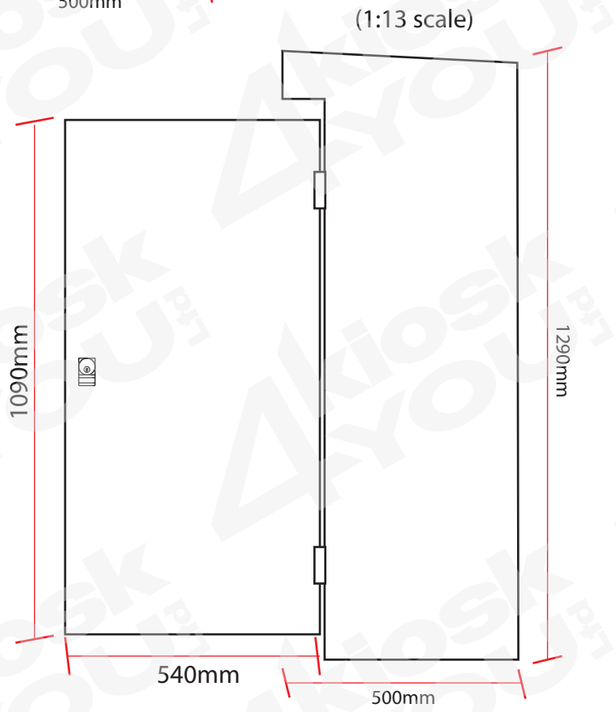


Side View

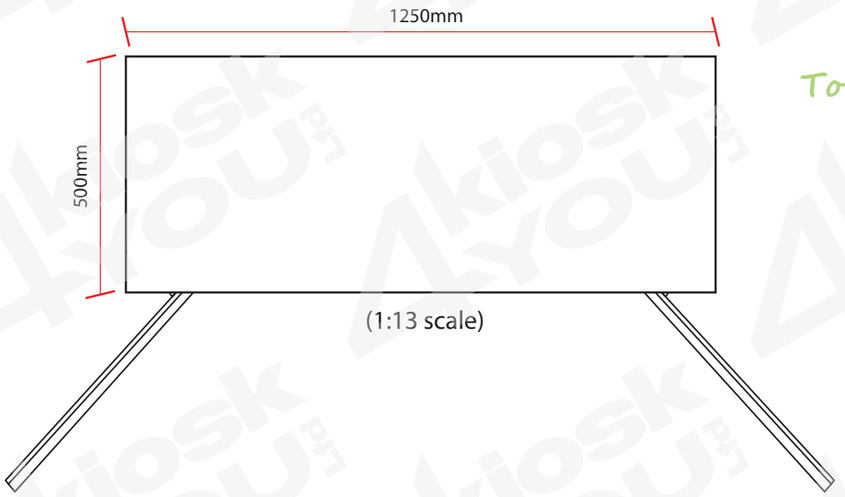


Top View

| Dimension Type | Height (mm) | Width (mm) | Depth (mm) |
|---|---|---|---|
| External | 1290 | 1250 | 500 |
| Internal | 1250 | 1250 | 420 |